Semester Roadmap
MANUFACTURING ENGINEERING 2016-2017
Fall Yr 1 Spring yr 1

Fall	Winter	Spring	Fall	Winter	Spring	Fall	Winter	Spring	Fall	Winter	Spring

MAJOR AND SUPPORT TRACK

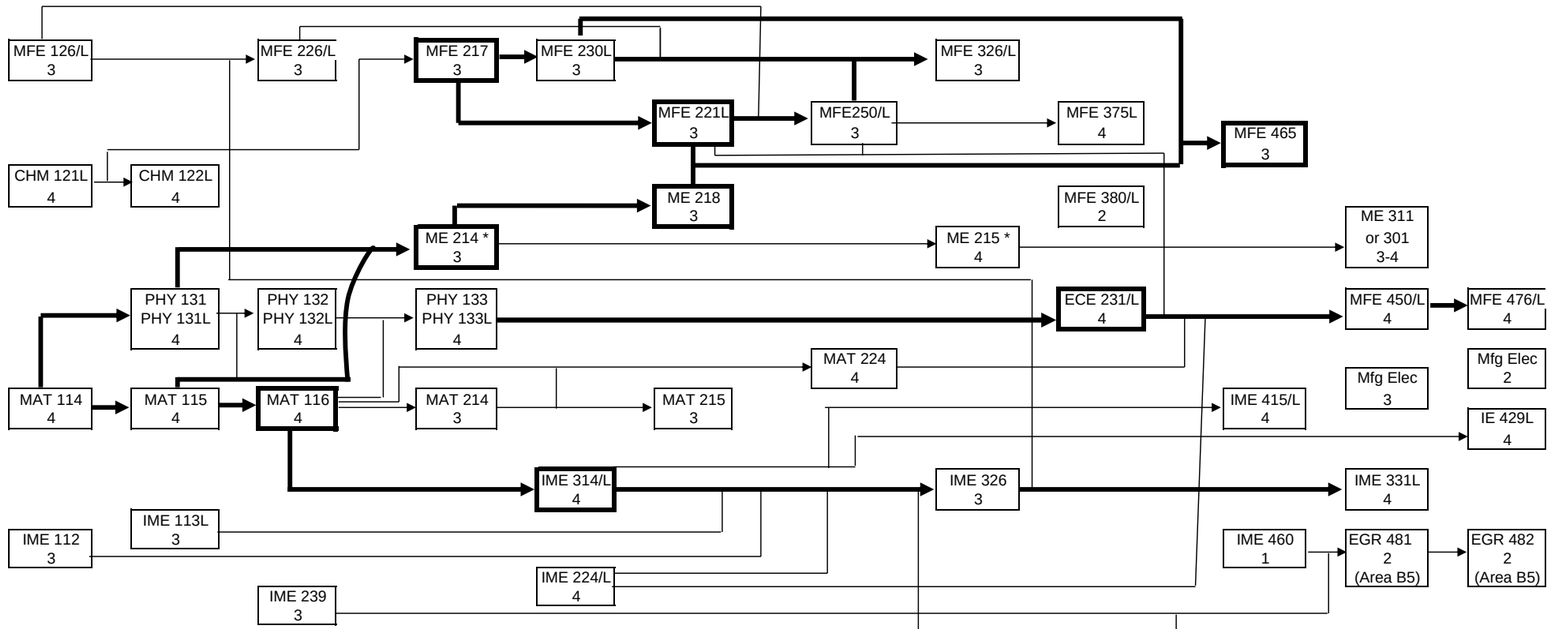

GENERAL EDUCATION IGE TRACK

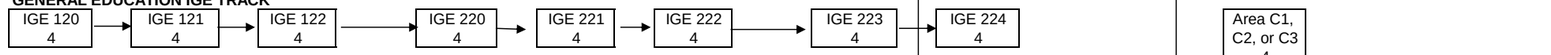

CLASSES NEEDED FOR BOTH STANDARD AND IGE TRACK

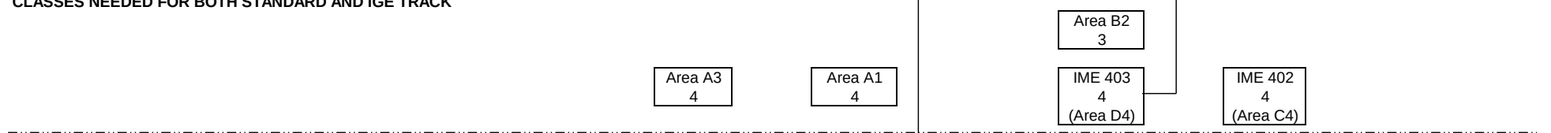

STANDARD GENERAL EDUCATION TRACK

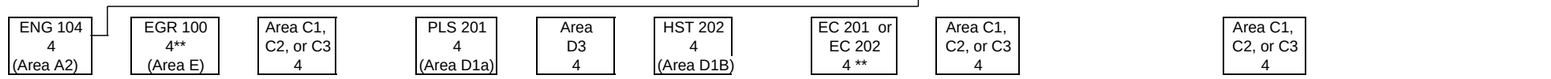

18	19	18	17	15	17	15	14	17	16	16	12	194

Notes:
* It is recommended that students take companion activities for ME 214 and ME 215

** Students with GE certification or in IGE track have already satisfied this requirement with other courses. If so, will have to file petition.

To optimize time here select the classes with bold squares as soon as possible and follow the bold paths.

Try to balance workload to the level of units you can handle per quarter, and in the proper mix of difficulty for you. In general, try to no more than two heavily quantitative courses at a time, take two or three major courses and a GE

ACTUAL QUARTER OFFERINGS WILL VARY FROM THOSE ABOVE.

Total Units 194

Students in the IGE general education program take all classes above this line

Students in the Standard general education program take all classes below this line

Arrows indicate prerequisites

Note that many MFE courses and IME courses are offered only once ot twice a year