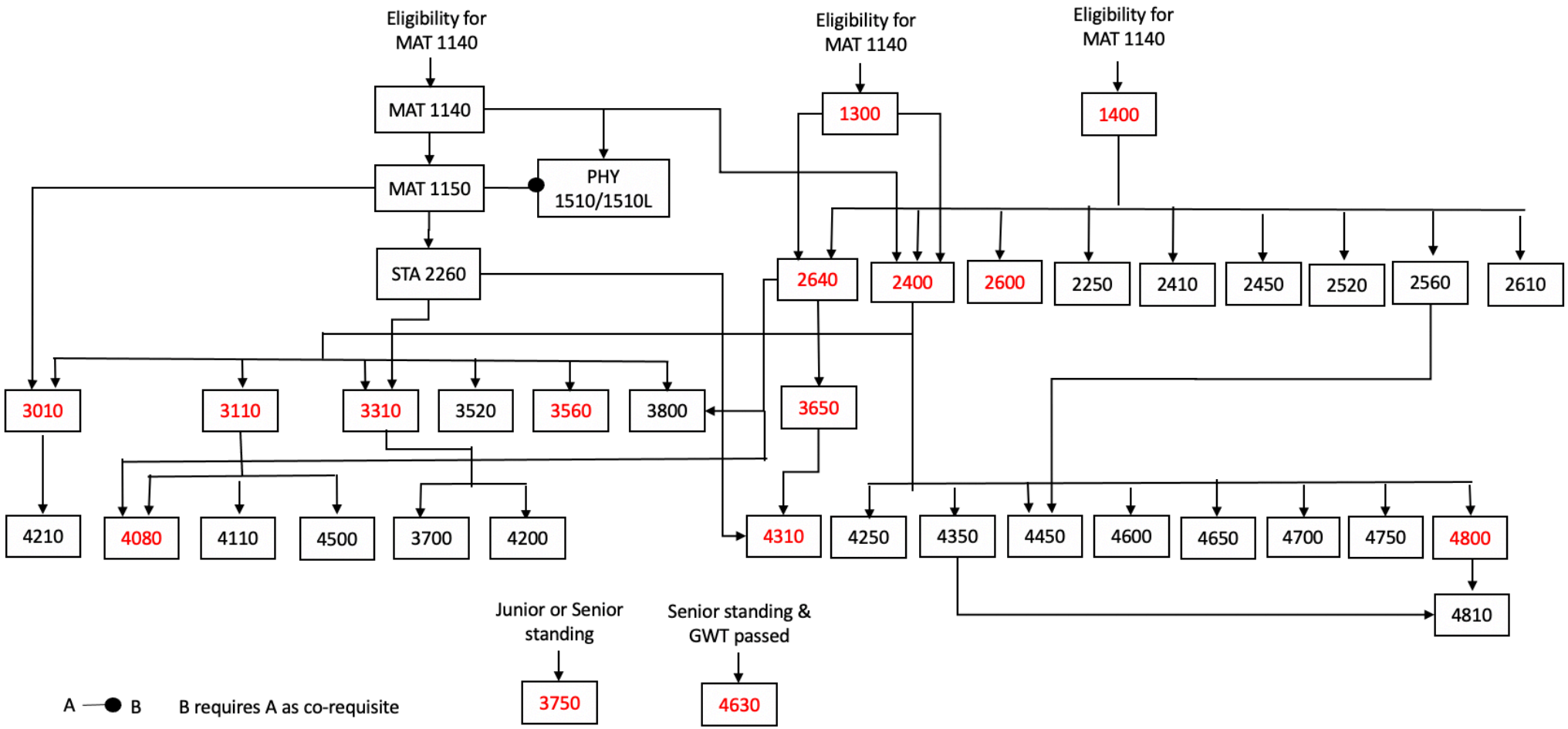Prerequisite Graph Updated 2021