Prerequisite Graph for 2014–2015 or Later Curriculum Years

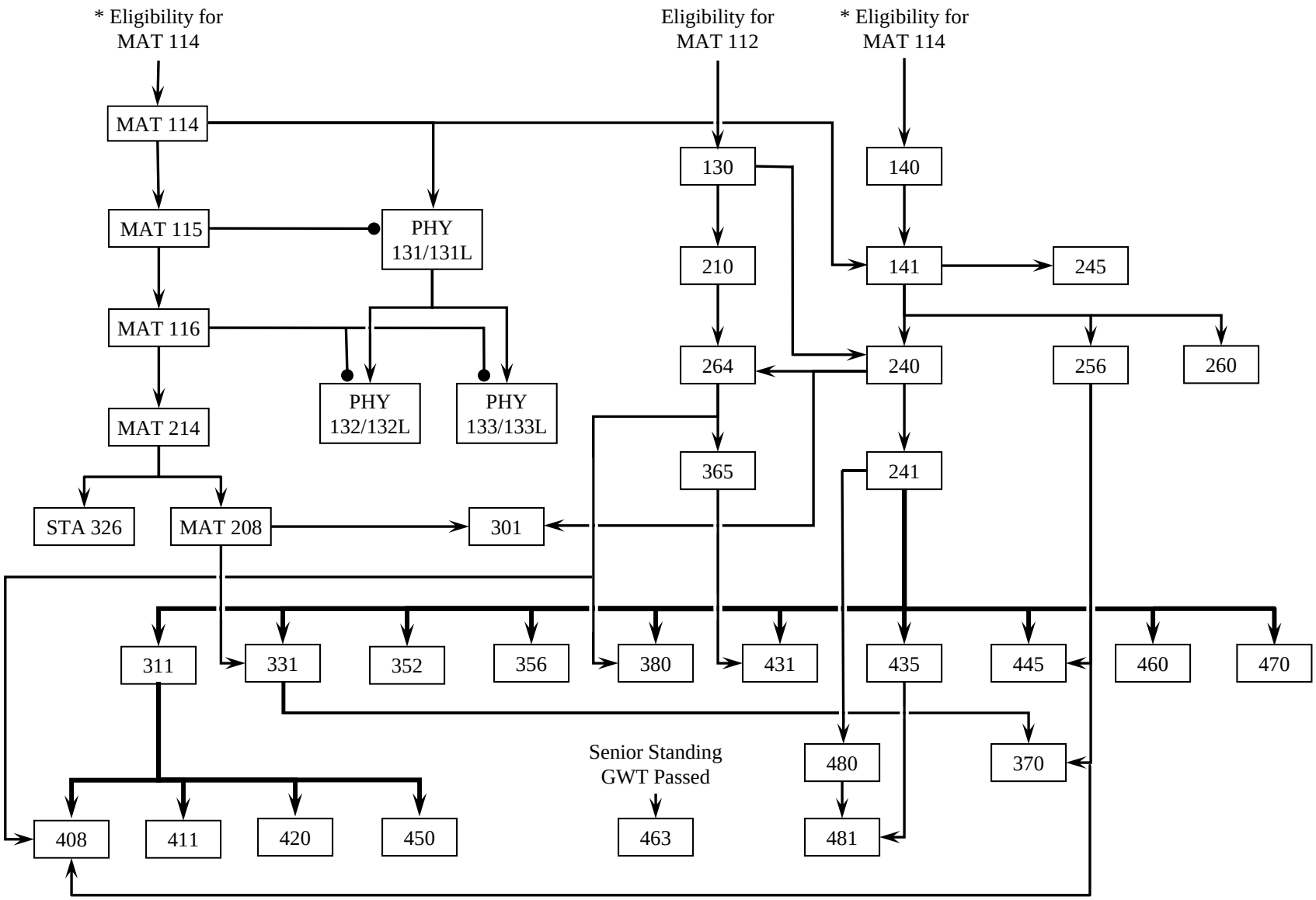

* Prerequisite of MAT 114: Appropriate MDPT or B or better in MAT 105 and MAT 106 or C or better in MAT 112 within two quarters

A —• B B requires A as corequisite

updated 9/2014